FORCE AND TORQUE SENSORS

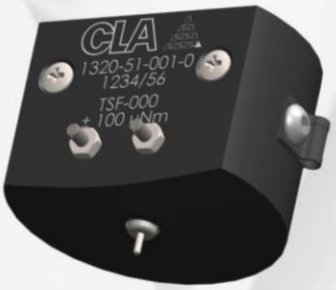

SC-002	Micro force sensor
LC-01 - LC-10	Force sensor
TSF-000 - TSF-05	Micro torque sensor
TSF-1 - TSF-100	Torque sensor

Copyright © CLA all rights reserved

CATALOG OF CLA
FORCE AND TORQUE SENSORS

FORCE AND TORQUE SENSORS

Denomination	Force sensor **SC-002**	Force sensor **LC-01**	Force sensor **LC-1**	Force sensor **LC-5**	Force sensor **LC-10**
Figure					
Measuring range	0 ... ± 20 mN	0 ... ± 0.1 N	0 ... ± 1 N	0 ... ± 5 N	0 ... ± 10 N
Max. linearity error	≤ 1 % F. S.	≤ 0.5 % F. S.	≤ 0.5 % F. S.	≤ 0.5 % F. S.	≤ 0.5 % F. S.
Max. hysteresis error	≤ 1 % F. S.	≤ 0.5 % F. S.	≤ 0.5 % F. S.	≤ 0.5 % F. S.	≤ 0.5 % F. S.
Main application	Micro-force sensor, very sensitive with high reactivity. Particularly used in microtechnology and watch industries.	Fine force sensor, sensitive, withhigh repeatability and strong conception. Without leverage effect on tip which is interchangeable.	Fine force sensor, sensitive, withhigh repeatability and strong conception. Without leverage effect on tip which is interchangeable.	Sensitive force sensor with high repeatability and strong conception. Without leverage effect on tip which is interchangeable.	Sensitive force sensor with high repeatability and strong conception. Without leverage effect on tip which is interchangeable.
Special application	Measurement of material bending, transmission quality, static and dynamic micro-torque, fastening of micro-assembly, no-load losses, exhaust torque.	Measurement of friction, transmission quality, static and dynamic torque, no-load losses, striking torque, yield of mechanicalmovement.	Measurement of holding magnetic winding, friction, spring torque, barrel torque, yield and number ofbarrel turn, running-in, manual winding torque of mechanical movement.	Measurement of spring torque, barrel torque, yield and number ofbarrel turn, aging test, running-in, energy storage of mechanical movement.	Measurement of spring torque, barrel torque, yield and number ofbarrel turn, aging test, running-in, energy storage of mechanical movement.
Models	1320-50-001-0 / -1	1320-50-002-0	1320-50-003-0	1320-50-008-0	1320-50-004-0

Denomination	Torque sensor **TSF-000**	Torque sensor **TSF-005**	Torque sensor **TSF-01**	Torque sensor **TSF-05**	Torque sensor **TSF-1**
Figure					
Measuring range	0 ... ± 100 µN.m	0 ... ± 500 µN.m	0 ... ± 1 mN.m	0 ... ± 5 mN.m	0 ... ± 10 mN.m
Max. linearity error	≤ 1 % F. S.	≤ 1 % F. S.	≤ 1 % F. S.	≤ 1 % F. S.	≤ 1 % F. S.
Max. hysteresis error	≤ 0.5 % F. S.	≤ 0.5 % F. S.	≤ 0.5 % F. S.	≤ 0.5 % F. S.	≤ 0.5 % F. S.
Main application	Micro-torque sensor, very sensitive with high repeatability. Used in microtechnology and watch industries.	Micro-torque sensor, very sensitive with high repeatability. Used in microtechnology and watch industries.	Fine torque sensor, very sensitive with high repeatability. Used in microtechnology and watch industries.	Fine torque sensor, very sensitive with high repeatability. Used in microtechnology and watch industries.	Torque sensor, highly sensitive with great repeatability. Used in microtechnology and watch industries.
Special application	Measurement of transmission quality in mechanical movement, static torque, no-load losses.	Measurement of transmission quality in mechanical movement, static torque, no-load losses.	Measurement of friction, transmission quality in mechanical movement, yield of transmission, fastening of micro-assembly.	Measurement of friction, transmission quality in mechanical movement, yield of transmission, fastening of micro-assembly.	Measurement of friction, rod torque, manual winding torque ofmechanical movement, energy storage of mechanical movement.
Models	1320-51-001-0	1320-51-002-0	1320-51-003-0	1320-51-004-0	1320-51-005-0

Denomination	Torque sensor **TSF-2**	Torque sensor **TSF-5**	Torque sensor **TSF-10**	Torque sensor **TSF-30**	Torque sensor **TSF-100**
Figure					
Measuring range	0 ... ± 20 mN.m	0 ... ± 50 mN.m	0 ... ± 0.1 N.m	0 ... ± 0.3 N.m	0 ... ± 1 N.m
Max. linearity error	≤ 1 % F. S.	≤ 1 % F. S.	≤ 1 % F. S.	≤ 1 % F. S.	≤ 1 % F. S.
Max. hysteresis error	≤ 0.5 % F. S.	≤ 0.5 % F. S.	≤ 0.5 % F. S.	≤ 0.5 % F. S.	≤ 0.5 % F. S.
Main application	Torque sensor, highly sensitive with great repeatability. Used in microtechnology and watch industries.	Torque sensor, highly sensitive with great repeatability. Used in microtechnology and watch industries.	High torque sensor, highly sensitive and repeatable. Used in microtechnology and engineering industries.	High torque sensor, highly sensitive and repeatable. Used in microtechnology and engineering industries.	High torque sensor, highly sensitive and repeatable. Used in microtechnology and engineering industries.
Special application	Measurement of friction, rod torque, energy storage and manualwinding torque of mechanical movement, running-in.	Measurement of friction, rod torque, energy storage and manualwinding torque of mechanical movement, running-in.	Measurement of friction, barrel torque, weld control, fastening.	Measurement of friction, weld control, fastening of propeller, piping valve control.	Measurement of friction, weld control, fastening of propeller, piping valve control.
Models	1320-51-006-0	1320-51-011-0	1320-51-007-0	1320-51-008-0	1320-51-009-0

Force sensor SC-002

SC-002 ± 20 mN

Delivery :	Ex stock / 4 weeks
Warranty :	12 months
Import CAD :	www.cla.ch Products -> Sensors -> CAD-SC-002

- Micro-force
- Bidirectional
- High acquisition frequency
- High performance measuring material
- Resistant to overloads

Description

The force sensor SC-002 is bidirectional and resistive type. The measuring system consists of a strain gauge in high-performance material. The measurement tip is constituted by a shaft diameter of 0.5mm with a locating notch for calibration and measurement. The sensor is designed so that its natural frequency is high.

Applications

The SC-002 sensor is ideal for any type of fine measurement, and can be used to create a leverage effect and accurate torque measurements. It can also be used with a standard 5 VDC power supply and a multimeter.

Some examples :

- Measurement of material bending
- Measurement of static micro-torque
- Measurement of dynamic micro-torque
- Friction measurement
- Fastening of micro-assembly

FORCE AND TORQUE SENSORS

Technical Data

Denomination	SC-002
Measuring range	± 20 mN
Maximal linearity error	≤ 1 % F. S.
Maximal hysteresis error	≤ 1 % F. S.
Theoretical resolution	< 5 µN
Nominal sensitivity	12 / 5 mV/V
Orientation	Bidirectional

Electrical values

Bridge resistance	Half bridge / Full bridge
Recommended excitation	4 VDC
Maximal excitation	6 VDC
Resonance frequency	450 Hz
Resistance	2200 Ω

Mechanical values

Deflection		0.2mm / 20 mN
Overload		150 % F. S.
Breaking		2500 % F. S.
Recommended dynamic performance		80 % F. S.
Material		Aluminium
Connector		M5, 4 plug
Wiring code	1 Brown	Excitation voltage +
	3 Blue	Excitation voltage –
	4 Black	Signal output +
	2 White	PE, Signal output -
Dimensions		28 x 28 x 35.5 mm
Weight		98 g
Protection		White POM plug

Order number

SC-002 Half bridge	± 20 mN	1320-50-001-0
SC-002 Full bridge	± 20 mN	1320-50-001-1

Application example in watch laboratory

Winding the spring of a barrel through the hand.

The SC-002 sensor retains the hand while the movement is rotating. The sensor does a torque measurement with a lever arm.

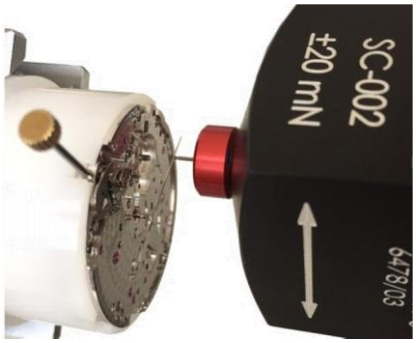

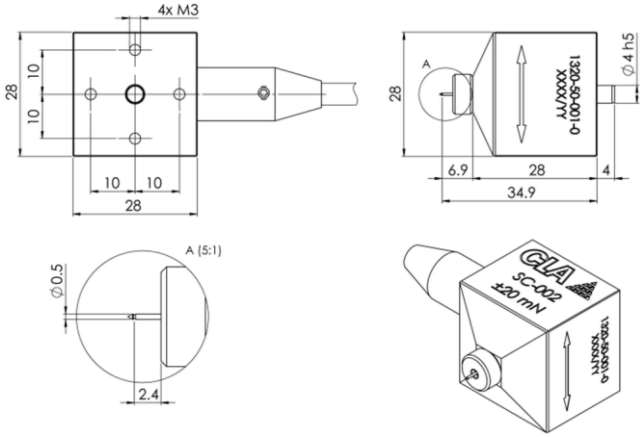

Accessories

Calibration certificate – Provided for each sensor, advised a calibration validation every 12 months.
Order number : 1320-96-010-0

VARIO*couple* - Precision laboratory device with mastered rotation axis.
Order number : 1320-00-001-0

NEO*vario* - Precision laboratory device with mastered rotation axis.
Order number : 1325-00-001-0

DIGI*mes* Universel - Signal converter in 0 - ± 10 VDC type BNC or USB (RS optional), manual adjustment of gain and offset, 5-digits display. For inductive or resistive sensor, half bridge or full bridge.
Order number : 1320-60-200-0

Multifunction display - Signal converter in 0 - ± 10 VDC, with manual adjustment of gain and offset, 5-digit display. For resistive sensor in half bridge.
Order number : -

Standard mounting plate – Effective fixation.
Order number : 1320-95-004-0

Quick mounting plate - Simplified fixation, without tools and pinned.
Order number : 1320-95-007-0

Cables – Shielded, 4 x 0.14▫, 2 m

Straight connector	4 wires	9000-01-050-2
Straight connector	MiniDin 4p	2320-50-010-0

FORCE AND TORQUE SENSORS

Force sensor LC-01, LC-1, LC-5, LC-10

LC-01 ± 0.1 N
LC-1 ± 1 N
LC-5 ± 5 N
LC-10 ± 10 N

Delivery :	Ex stock / 4 weeks
Warranty :	12 months
Import CAD :	www.cla.ch Products -> Sensors -> CAD-LC

- Interchangeable tip
- Bidirectional
- Fine measure, repeatable
- High performance measuring material
- Resistant to overloads

Description

The range of LC sensors is bidirectional and inductive type. The measuring system consists of a movable core which is integral with the shaft, between two specifics springs in high-performance material. The measurement tip is constituted by a shaft diameter of 1 mm and is interchangeable, allowing a personalised tip. The sensor does not vary its measurement according to the pressure zone on the measurement tip.

Applications

The LC force sensor is ideal for any kind of force measurement, and can be used to create a leverage effect and accurate torque measurements.

Some examples :

- Friction measurement
- Energy storage (barrel)
- Yield of mechanical movement
- Striking torque
- Aging test

FORCE AND TORQUE SENSORS

Technical Data

Denomination	LC-01 / LC-1 / LC-5 / LC-10
Measuring range	± 0.1 / ± 1 / ± 5 / ± 10 N
Maximal linearity error	≤ 0.5 % F. S.
Maximal hysteresis error	≤ 0.5 % F. S.
Theoretical resolution	< 10 / < 50 / < 80 / < 100 µN
Nominal sensitivity	12 / 20 / 10 / 10 mV/V
Orientation	Bidirectional

Electrical values

Bridge resistance	Half bridge
Recommended excitation	5 VDC
Maximal excitation	6 VDC
Resonance frequency	100 / 200 / 200 / 200 Hz
Resistance	45 Ω

Mechanical values

Deflection		0.17 mm - 0.1 N / 1 N / 5 N / 10 N
Overload		150 % F. S.
Breaking		300 % F. S.
Recommended dynamic performance		80 % F. S.
Material		Aluminium
Connector		M5, 4 plug
Wiring code	1 Brown	Excitation voltage +
	3 Blue	Excitation voltage –
	4 Black	Signal output +
	2 White	PE, Signal output -
Dimensions		30 x 42 x 53 mm
Weight		163 g
Protection		Red aluminium plug

Order numbers

LC-01	± 0.1 N	1320-50-002-0
LC-1	± 1 N	1320-50-003-0
LC-5	± 5 N	1320-50-008-0
LC-10	± 10 N	1320-50-004-0

Application example in industry
Friction measurement on a rotative interrupter

The LC-1 sensor holds the base of the interrupter and the cursor is rotating. The sensor performs a torque measurement with a lever arm.

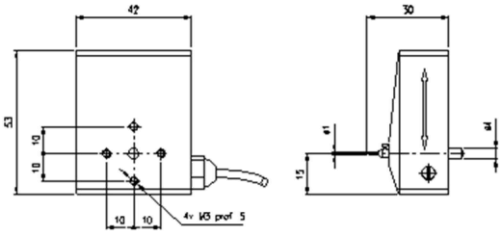

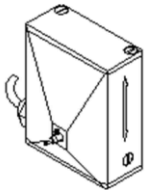

Accessories

Calibration certificate – Provided for each sensor, advised a calibration validation every 12 months.
Order number : 1320-96-010-0

Measurement tip – Additional universal or personalised tip, adapted.
Order number : 1320-50-115-x

VARIO*couple* - Precision laboratory device with mastered rotation axis.
Order number : 1320-00-001-0

NEO*vario* - Precision laboratory device with mastered rotation axis.
Order number : 1325-00-001-0

DIGI*mes* Universel - Signal converter in 0 - ± 10 VDC type BNC or USB (RS optional), manual adjustment of gain and offset, 5-digits display. For inductive or resistive sensor, half bridge or full bridge.
Order number : 1320-60-200-0

Standard mounting plate – Effective fixation.
Order number : 1320-95-004-0

Quick mounting plate - Simplified fixation, without tools and pinned.
Order number : 1320-95-007-0

Adapter cable - MiniDin 4p - Tuchel Din 4p.
Order number : 2320-60-021-0

Cables – Shielded, 4 x 0.14▫, 2 m

Straight connector	4 wires	9000-01-050-2
Straight connector	MiniDin 4p	2320-50-010-0

FORCE AND TORQUE SENSORS

Torque sensor TSF-000, TSF-005

TSF-000 ± 100 µN.m
TSF-005 ± 500 µN.m

Delivery :	Ex stock / 4 weeks
Warranty :	12 months
Import CAD :	www.cla.ch Products -> Sensors -> CAD-TSF-00x

- Micro-torque measurement
- Universal measuring shaft
- Bidirectional
- High acquisition frequency
- Compact dimensions

Description

The TSF-000 / TSF-005 torque sensor is bidirectional and inductive type with carrier frequency. The measuring system consist of a shaft mounted on flexible pivots which allowing a high-performance torque measurement without friction. A fine angular resolution of 1° full scale gives a high linearity and a practically negligible hysteresis. The 1 mm diameter measurement shaft permits to use personalised tools and adapter ring.

Applications

The TSF-000 / TSF-005 torque sensor is ideal for any type of fine measurement. Its compact dimension and high resistance to chips make it a sensor easily integrable in an installation.

Some examples :

- Micro-torque measurement
- Friction measurement
- Fastening of micro-assembly
- Measurement of transmission quality
- No-load losses

FORCE AND TORQUE SENSORS

Technical Data

Denomination	TSF-000 / TSF-005
Measuring range	± 100 / ± 500 µN.m
Maximal linearity error	≤ 1 % F. S.
Maximal hysteresis error	≤ 0.5 % F. S.
Theoretical resolution	< 0.1 / < 0.5 µN.m
Nominal sensitivity	5 / 23 mV/V
Orientation	Bidirectional

Electrical values

Bridge resistance	Full bridge
Recommended excitation	5 VDC
Maximal excitation	6 VDC
Resonance frequency	500 Hz
Resistance	80 Ω

Mechanical values

Deflection		< 5 % F. S.
Overload		150 % F. S.
Breaking		300 % F. S.
Recommended dynamic performance		80 % F. S.
Material		Aluminium
Connector		M5, 4 plug
Wiring code	1 Brown	Excitation voltage +
	3 Blue	Excitation voltage –
	4 Black	Signal output +
	2 White	Signal output –
	Shield	PE
Dimensions		Ø 40 x 32 mm
Weight		96 g

Order numbers

TSF-000	± 100 µN.m	1320-51-001-0
TSF-005	± 500 µN.m	1320-51-002-0

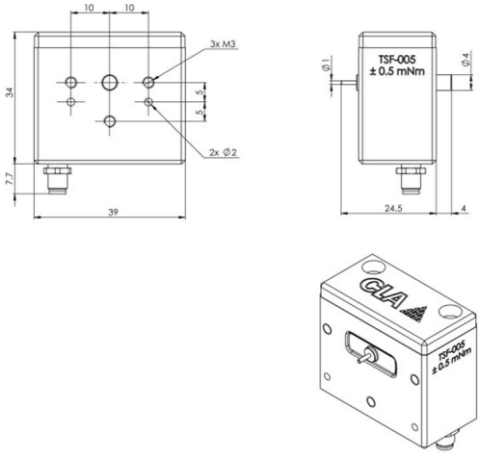

Accessories

Calibration certificate – Provided for each sensor, advised a calibration validation every 12 months.
Order number : 1320-96-010-0

VARIO*couple* - Precision laboratory device with mastered rotation axis.
Order number : 1320-00-001-0

NEO*vario* - Precision laboratory device with mastered rotation axis.
Order number : 1325-00-001-0

DIGI*mes* Universel - Signal converter in 0 - ± 10 VDC type BNC or USB (RS optional), manual adjustment of gain and offset, 5-digits display. For inductive or resistive sensor, half bridge or full bridge.
Order number : 1320-60-200-0

Standard mounting plate – Effective fixation.
Order number : 1320-95-004-0

Quick mounting plate - Simplified fixation, without tools and pinned.
Order number : 1320-95-007-0

Adapter cable - MiniDin 4p - Tuchel Din 4p.
Order number : 2320-60-021-0

Adapter ring - Ø 1 – Ø 6
Order number : 1320-95-400-0

Adjustable coupling key – Allows quick coupling, using interchangeable plates.
Order number : 1303-20-001-0

Cables – Shielded, 4 x 0.14▫, 2 m

Straight connector	4 wires	9000-01-050-2
Straight connector	MiniDin 4p	2320-50-010-0

FORCE AND TORQUE SENSORS

Torque sensor TSF-01, TSF-05, TSF-1

TSF-01	± 1 mN.m
TSF-05	± 5 mN.m
TSF-1	± 10 mN.m

Delivery :	Ex stock / 4 weeks
Warranty :	12 months
Import CAD :	www.cla.ch Products -> Sensors -> CAD-TSF-0x

- Fine torque measurement
- Universal measuring shaft
- Bidirectional
- High acquisition frequency
- Compact dimensions

Description

The TSF-01 / TSF-05 / TSF-1 torque sensor is bidirectional and inductive type with carrier frequency. The measuring system consist of a shaft mounted on flexible pivots which allowing a high-performance torque measurement without friction. A fine angular resolution of 1° full scale gives a high linearity and a practically negligible hysteresis. The 1.5 mm diameter measurement shaft permits to use personalised tools and adapter ring.

Applications

The TSF-01 / TSF-05 / TSF-1 torque sensor is ideal for any type of fine measurement. Its compact dimension and high resistance to chips make it a sensor easily integrable in an installation.

Some examples :

- Friction measurement
- Yield of transmission
- Static torque measurement
- Fastening of micro-assembly
- Striking torque

FORCE AND TORQUE SENSORS

Technical Data

Denomination	TSF-01 / TSF-05 / TSF-1
Measuring range	± 1 / ± 5 / ± 10 mN.m
Maximal linearity error	≤ 1 % F. S.
Maximal hysteresis error	≤ 0.5 % F. S.
Theoretical resolution	< 1 / < 5 / < 10 µN.m
Nominal sensitivity	25 / 15 / 18 mV/V
Orientation	Bidirectional

Electrical values

Bridge resistance	Full bridge
Recommended excitation	5 VDC
Maximal excitation	6 VDC
Resonance frequency	500 Hz
Resistance	80 Ω

Mechanical values

Deflection		< 5 % F. S.
Overload		150 % F. S.
Breaking		300 % F. S.
Recommended dynamic performance		80 % F. S.
Material		Aluminium
Connector		M5, 4 plug
Wiring code	1 Brown	Excitation voltage +
	3 Blue	Excitation voltage –
	4 Black	Signal output +
	2 White	Signal output –
	Shield	PE
Dimensions		Ø 40 x 34 mm
Weight		98 g

Order numbers

TSF-01	± 1 mN.m	1320-51-003-0
TSF-05	± 5 mN.m	1320-51-004-0
TSF-1	± 10 mN.m	1320-51-005-0

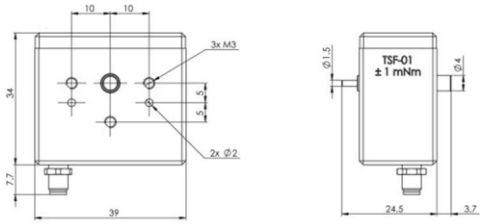

Accessories

Calibration certificate – Provided for each sensor, advised a calibration validation every 12 months.
Order number : 1320-96-010-0

VARIO*couple* - Precision laboratory device with mastered rotation axis.
Order number : 1320-00-001-0

NEO*vario* - Precision laboratory device with mastered rotation axis.
Order number : 1325-00-001-0

DIGI*mes* Universel - Signal converter in 0 - ± 10 VDC type BNC or USB (RS optional), manual adjustment of gain and offset, 5-digits display. For inductive or resistive sensor, half bridge or full bridge.
Order number : 1320-60-200-0

Standard mounting plate – Effective fixation.
Order number : 1320-95-004-0

Quick mounting plate - Simplified fixation, without tools and pinned.
Order number : 1320-95-007-0

Adapter ring - Ø 1,5 – Ø 6
Order number : 1320-95-401-0

Adjustable coupling key – Allows quick coupling, using interchangeable plates.
Order number : 1303-20-001-0

Cables – Shielded, 4 x 0.14▫, 2 m

Straight connector	4 wires	9000-01-050-2
Straight connector	MiniDin 4p	2320-50-010-0

FORCE AND TORQUE SENSORS

Torque sensor TSF-2, TSF-5

TSF-2 ± 20 mN.m
TSF-5 ± 50 mN.m

Delivery :	Ex stock / 4 weeks
Warranty :	12 months
Import CAD :	www.cla.ch Products -> Sensors -> CAD-TSF-x

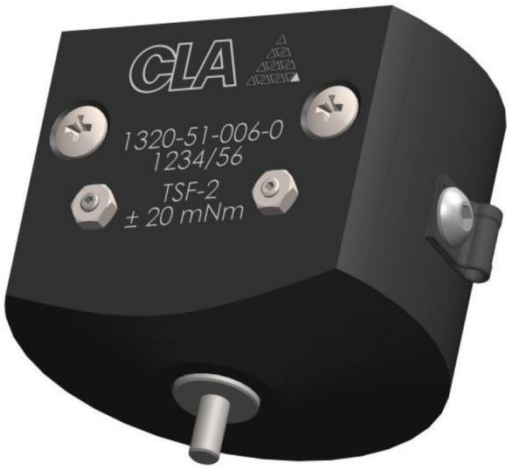

- Fine torque measurement
- Universal measuring shaft
- Bidirectional
- High acquisition frequency
- Compact dimensions

Description

The TSF-2 / TSF-5 torque sensor is bidirectional and inductive type with carrier frequency. The measuring system consist of a shaft mounted on flexible pivots which allowing a high-performance torque measurement without friction. A fine angular resolution of 1° full scale gives a high linearity and a practically negligible hysteresis. The 3 mm diameter measurement shaft permits to use personalised tools and adapter ring.

Applications

The TSF-2 / TSF-5 torque sensor is ideal for any type of measurement. Its compact dimension and high resistance to chips make it a sensor easily integrable in an installation.

Some examples :

- Friction measurement
- Energy storage (barrel)
- Yield of mechanical movement
- Aging test
- Riveting control

FORCE AND TORQUE SENSORS

Technical Data

Denomination	TSF-2 / TSF-5
Measuring range	± 20 / ± 50 mN.m
Maximal linearity error	≤ 1 % F. S.
Maximal hysteresis error	≤ 0.5 % F. S.
Theoretical resolution	< 20 / < 50 µN.m
Nominal sensitivity	16 / 20 mV/V
Orientation	Bidirectional

Electrical values

Bridge resistance	Full bridge
Recommended excitation	5 VDC
Maximal excitation	6 VDC
Resonance frequency	500 Hz
Resistance	80 Ω

Mechanical values

Deflection		< 5 % F. S.
Overload		150 % F. S.
Breaking		300 % F. S.
Recommended dynamic performance		80 % F. S.
Material		Aluminium
Connector		M5, 4 plug
Wiring code	1 Brown	Excitation voltage +
	3 Blue	Excitation voltage –
	4 Black	Signal output +
	2 White	Signal output –
	Shield	PE
Dimensions		Ø 44 x 40.5 mm
Weight		128 g

Order numbers

TSF-2	± 20 mN.m	1320-51-006-0
TSF-5	± 50 mN.m	1320-51-011-0

Application example in watch laboratory
Barrel spring winding measurement

The axis of the barrel is in rotation by its square, the sensor TSF-2 hold the drum by the teeth of the barrel with the adjustable coupling key equipped by the plates with counter-teeth.

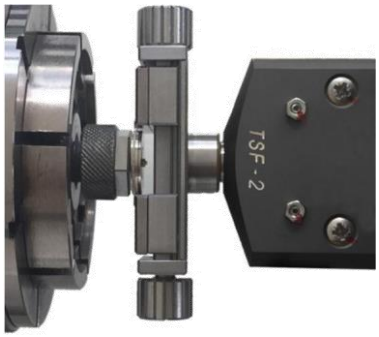

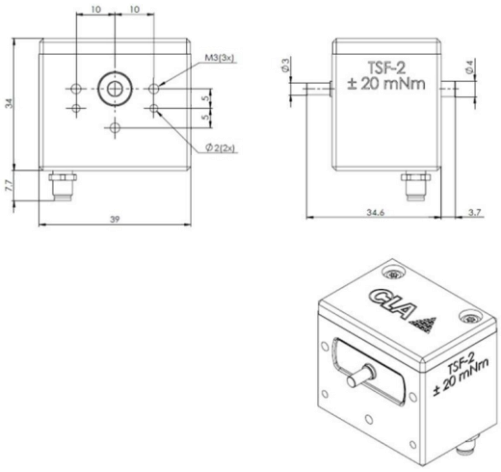

Accessories

Calibration certificate – Provided for each sensor, advised a calibration validation every 12 months.
Order number : 1320-96-010-0

VARIO*couple* - Precision laboratory device with mastered rotation axis.
Order number : 1320-00-001-0

NEO*vario* - Precision laboratory device with mastered rotation axis.
Order number : 1325-00-001-0

DIGI*mes* Universel - Signal converter in 0 - ± 10 VDC type BNC or USB (RS optional), manual adjustment of gain and offset, 5-digits display. For inductive or resistive sensor, half bridge or full bridge.
Order number : 1320-60-200-0

Standard mounting plate – Effective fixation.
Order number : 1320-95-004-0

Quick mounting plate - Simplified fixation, without tools and pinned.
Order number : 1320-95-007-0

Adapter ring - Ø 3 – Ø 6
Order number : 1320-95-402-0

Adjustable coupling key – Allows quick coupling, using interchangeable plates.
Order number : 1303-20-001-0

Cables – Shielded, 4 x 0.14▫, 2 m

Straight connector	4 wires	9000-01-050-2
Straight connector	MiniDin 4p	2320-50-010-0

FORCE AND TORQUE SENSORS

Torque sensor TSF-10, TSF-30, TSF-100

TSF-10	± 0.1 N.m
TSF-30	± 0.3 N.m
TSF-100	± 1N.m

Delivery :	Ex stock / 4 weeks
Warranty :	12 months
Import CAD :	www.cla.ch Products -> Sensors -> CAD-TSF-x0

- Integrated connector
- Universal measuring shaft
- Bidirectional
- High acquisition frequency
- Compact dimensions

Description

The TSF-10 / TSF-30 / TSF-100 torque sensor is bidirectional and inductive type with carrier frequency. The measuring system consist of a shaft mounted on flexible pivots which allowing a high-performance torque measurement without friction. A fine angular resolution of 1° full scale gives a high linearity and a practically negligible hysteresis. The 6 mm or 10 mm diameter measurement shaft permit to use personalised tools and adapter ring.

Applications

The TSF-10 / TSF-30 / TSF-100 torque sensor is ideal for any type of substantial measurement. Its fixing system pinned by the shaft and its high resistance to chips make it a sensor easily integrable in an installation.

Some examples :

- Control of assembly fastening
- Friction measurement
- Piping valve control
- Aging test
- Deformation measurement

FORCE AND TORQUE SENSORS

Technical Data

Denomination	TSF-10 / TSF-30 / TSF-100
Measuring range	± 0.1 / ± 0.3 / ± 1 N.m
Maximal linearity error	≤ 1 % F. S.
Maximal hysteresis error	≤ 0.5 % F. S.
Theoretical resolution	< 10 / < 50 / < 100 µN.m
Nominal sensitivity	? / 30 / 45 mV/V
Orientation	Bidirectional

Electrical values

Bridge resistance	Half bridge
Recommended excitation	5 VDC
Maximal excitation	6 VDC
Resonance frequency	500 Hz
Resistance	45 Ω

Mechanical values

Deflection		< 5 % F. S.
Overload		150 % F. S.
Breaking		300 % F. S.
Recommended dynamic performance		80 % F. S.
Material		Aluminium
Electrical connection		Shielded cable 4 x 0.25□, 1.5 m
Connector		Female MiniDin 4 plug
Wiring code	White	Excitation voltage +
	Brown	Excitation voltage –
	Green	Signal output +
	Shield	PE, Signal output –
Dimensions		58 / 66 / 77 x 60 x 60 mm
Weight		530 / 580 / 608 g

Order numbers

TSF-10	± 0.1 N.m	1320-51-007-0
TSF-30	± 0.3 N.m	1320-51-008-0
TSF-100	± 1 N.m	1320-51-009-0

Application example in industry
Measuring a deformation

The TSF-100 sensor, with an adapter ring and a counterpieceprint key, hold the element's axis. This element is in a mastered rotation.

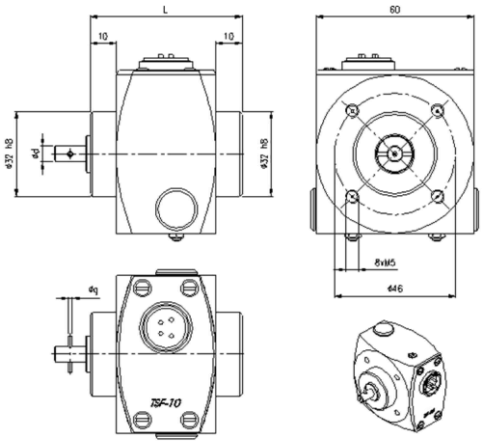

	Types		
	TSF-10	TSF-30	TSF-100
ød	6 h7	6 h7	10 h10
øg	1.5 h5	1.5 h5	3 h5
L	58	66	77

Accessories

Calibration certificate – Provided for each sensor, advised a calibration validation every 12 months.
Order number : 1320-96-010-0

VARIO*couple* - Precision laboratory device with mastered rotation axis.
Order number : 1320-00-001-0

NEO*vario* - Precision laboratory device with mastered rotation axis.
Order number : 1325-00-001-0

DIGI*mes* Universel - Signal converter in 0 - ± 10 VDC type BNC or USB (RS optional), manual adjustment of gain and offset, 5-digits display. For inductive or resistive sensor, half bridge or full bridge.
Order number : 1320-60-200-0

DIGI*mes* Compact - Signal converter in 0 - ± 10 VDC, manual adjustment of gain and offset, simplified. For inductive or resistive sensor, half bridge or full bridge.
Order number : 1320-60-250-0

Standard mounting plate – Effective fixation.
Order number : 1320-95-004-0

Quick mounting plate - Simplified fixation, without tools and pinned.
Order number : 1320-95-007-0

Adapter cable - MiniDin 4p - Tuchel Din 4p.
Order number : 2320-60-021-0

Adjustable coupling key – Allows quick coupling, using interchangeable plates.
Order number : 1303-20-001-0

Summary

Global presentation 2

Force sensor SC-002 3
- SC-002 HB 1320-50-001-0 3
- SC-002 FB 1320-50-001-1 3

Force sensor LC-01, LC-1, LC-5, LC-10 5
- LC-01 1320-50-002-0 5
- LC-1 1320-50-003-0 5
- LC-5 1320-50-008-0 5
- LC-10 1320-50-004-0 5

Torque sensor TSF-000, TSF-005 7
- TSF-000 1320-51-001-0 7
- TSF-005 1320-51-002-0 7

Torque sensor TSF-01, TSF-05, TSF-1 9
- TSF-01 1320-51-003-0 9
- TSF-05 1320-51-004-0 9
- TSF-1 1320-51-005-0 9

Torque sensor TSF-2, TSF-5 11
- TSF-2 1320-51-006-0 11
- TSF-5 1320-51-011-0 11

Torque sensor TSF-10, TSF-30, TSF-100 13
- TSF-10 1320-51-007-0 13
- TSF-30 1320-51-008-0 13
- TSF-100 1320-51-009-0 13